AQUAPERLA

Electric Heated Towel Bar
01-HOR.HTR
Instruction Manual

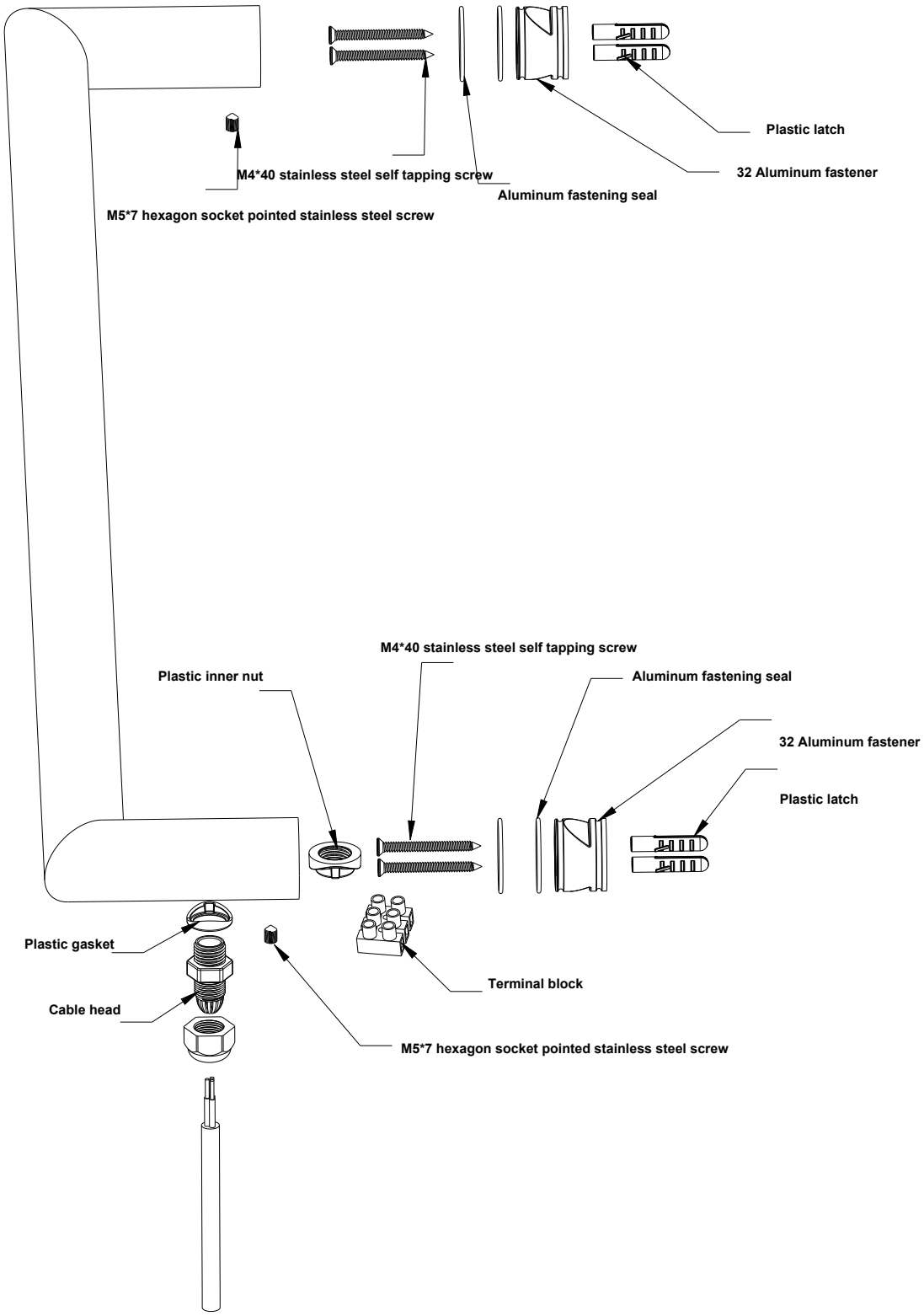

1

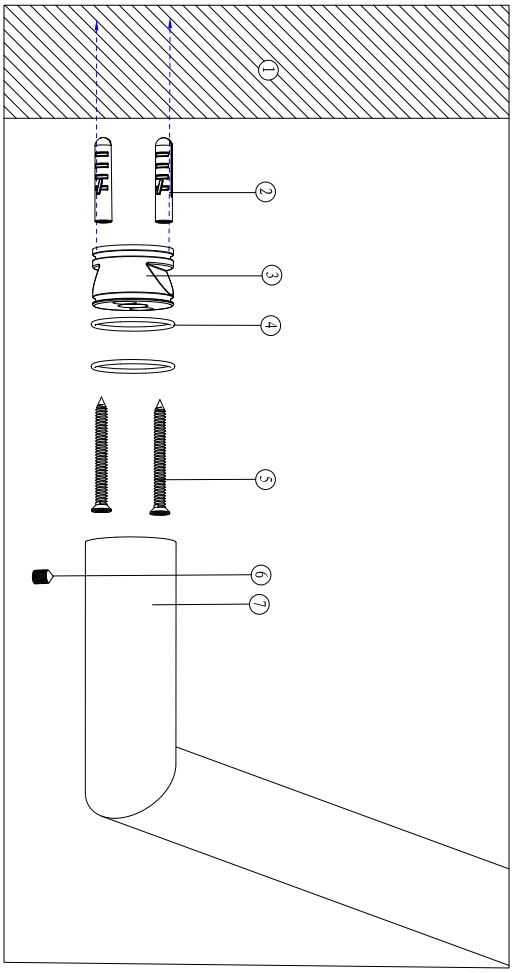

2

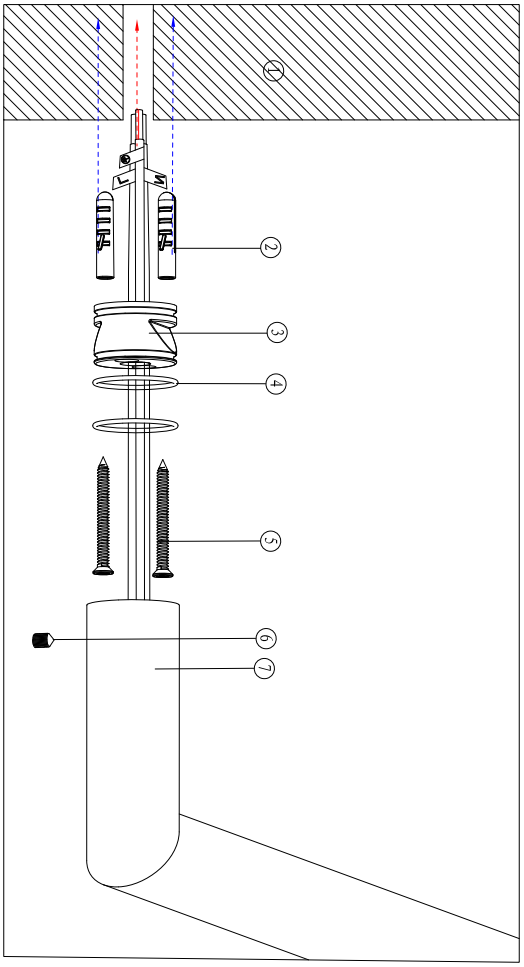
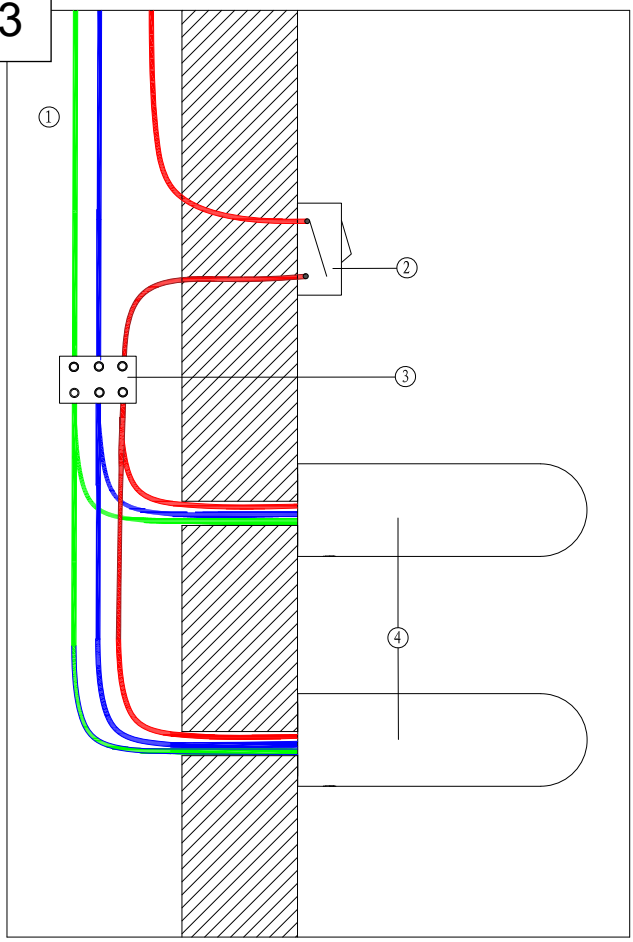
3